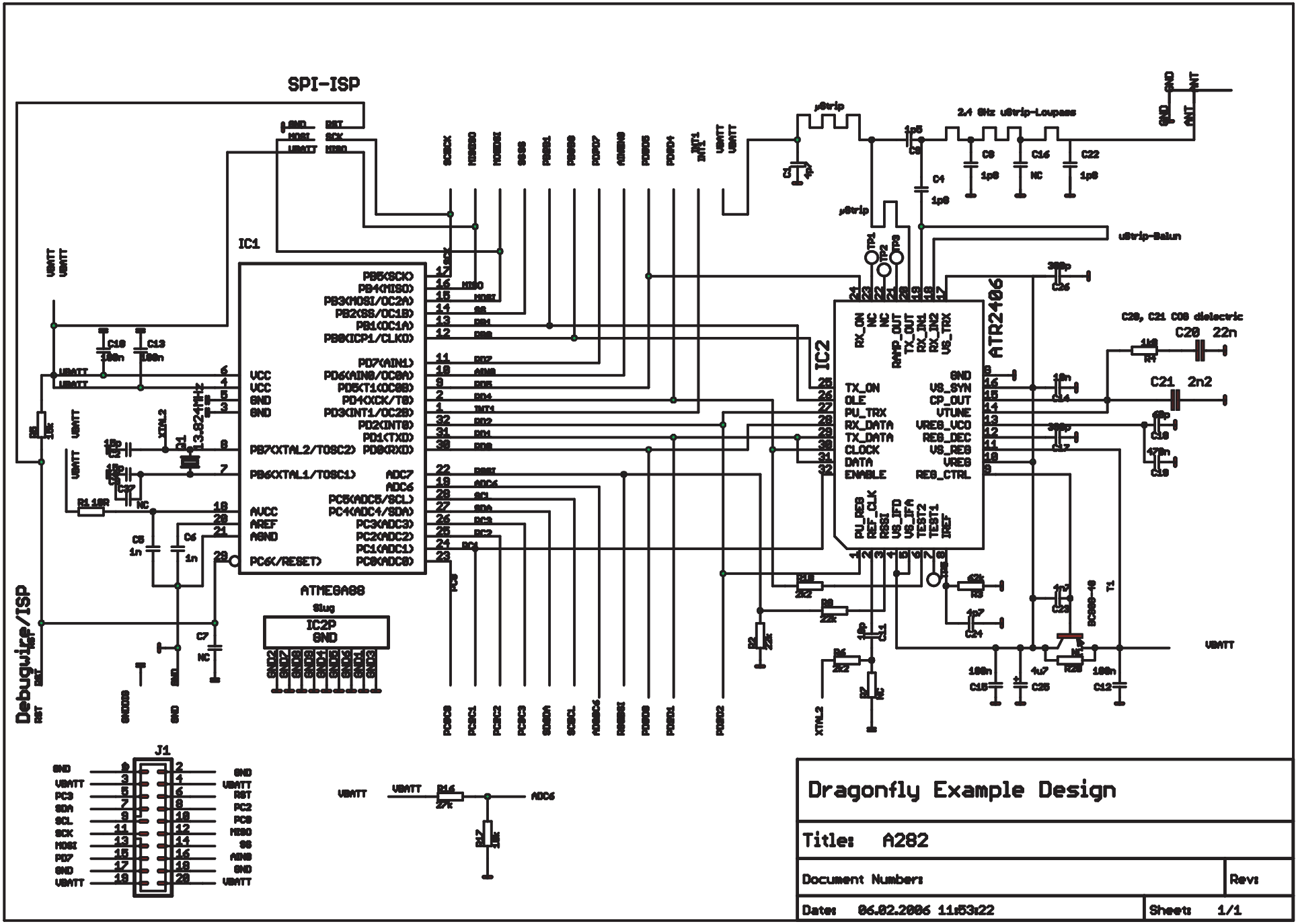
SPI-ISP
IC1
ATMEGA88
Slug
IC2P
GND
IC2
ATR2406
µStrip
2.4 GHz uStrip-Lowpass
uStrip-Balun
C20, C21 C09 dielectric
C20 22n
C21 2n2
Debugwire/ISP
J1
VBATT
Dragonfly Example Design
Title: A282
Document Number:
Rev:
Date: 06.02.2006 11:53:22
Sheet: 1/1